Cambridge Assessment International Education

Cambridge International AS & A Level

PHYSICS **9702/13**

Paper 1 Multiple Choice **May/June 2023**

1 hour 15 minutes

You must answer on the multiple choice answer sheet.

3539121654

You will need: Multiple choice answer sheet
Soft clean eraser
Soft pencil (type B or HB is recommended)

INSTRUCTIONS

- There are **forty** questions on this paper. Answer **all** questions.
- For each question there are four possible answers **A**, **B**, **C** and **D**. Choose the **one** you consider correct and record your choice in soft pencil on the multiple choice answer sheet.
- Follow the instructions on the multiple choice answer sheet.
- Write in soft pencil.
- Write your name, centre number and candidate number on the multiple choice answer sheet in the spaces provided unless this has been done for you.
- Do **not** use correction fluid.
- Do **not** write on any bar codes.
- You may use a calculator.

INFORMATION

- The total mark for this paper is 40.
- Each correct answer will score one mark.
- Any rough working should be done on this question paper.

This document has **20** pages. Any blank pages are indicated.

© UCLES 2023

[Turn over

Data

acceleration of free fall	$g = 9.81\,\text{m s}^{-2}$
speed of light in free space	$c = 3.00 \times 10^{8}\,\text{m s}^{-1}$
elementary charge	$e = 1.60 \times 10^{-19}\,\text{C}$
unified atomic mass unit	$1\,\text{u} = 1.66 \times 10^{-27}\,\text{kg}$
rest mass of proton	$m_\text{p} = 1.67 \times 10^{-27}\,\text{kg}$
rest mass of electron	$m_\text{e} = 9.11 \times 10^{-31}\,\text{kg}$
Avogadro constant	$N_\text{A} = 6.02 \times 10^{23}\,\text{mol}^{-1}$
molar gas constant	$R = 8.31\,\text{J K}^{-1}\,\text{mol}^{-1}$
Boltzmann constant	$k = 1.38 \times 10^{-23}\,\text{J K}^{-1}$
gravitational constant	$G = 6.67 \times 10^{-11}\,\text{N m}^2\,\text{kg}^{-2}$
permittivity of free space	$\varepsilon_0 = 8.85 \times 10^{-12}\,\text{F m}^{-1}$ $\left(\frac{1}{4\pi\varepsilon_0} = 8.99 \times 10^{9}\,\text{m F}^{-1}\right)$
Planck constant	$h = 6.63 \times 10^{-34}\,\text{J s}$
Stefan–Boltzmann constant	$\sigma = 5.67 \times 10^{-8}\,\text{W m}^{-2}\,\text{K}^{-4}$

Formulae

uniformly accelerated motion	$s = ut + \frac{1}{2}at^2$ $v^2 = u^2 + 2as$
hydrostatic pressure	$\Delta p = \rho g \Delta h$
upthrust	$F = \rho g V$
Doppler effect for sound waves	$f_\text{o} = \frac{f_\text{s} v}{v \pm v_\text{s}}$
electric current	$I = Anvq$
resistors in series	$R = R_1 + R_2 + \ldots$
resistors in parallel	$\frac{1}{R} = \frac{1}{R_1} + \frac{1}{R_2} + \ldots$

© UCLES 2023

1 What **must** be included in a record of a physical quantity?

A an integer value for the quantity

B an SI unit

C a numerical value for the quantity

D a unit expressed in base units

2 What is the ohm expressed in SI base units?

A $kg\,m^2\,s^{-3}\,A^{-2}$ **B** $kg^{-1}\,m^{-2}\,s^3\,A^2$ **C** $J\,C^{-1}\,A^{-1}$ **D** $W\,A^{-2}$

3 A desk has a true width of 50.0 cm.

Two students, X and Y, measure the width of the desk.

Student X uses a tape measure and records a width of (49.5 ± 0.5) cm.

Student Y uses a metre rule and records a width of (51.4 ± 0.1) cm.

Which statement about the measurement of student X is correct?

A It is less accurate and less precise than the measurement of student Y.

B It is less accurate but more precise than the measurement of student Y.

C It is more accurate and more precise than the measurement of student Y.

D It is more accurate but less precise than the measurement of student Y.

4 The diagram shows two vectors, X and Y, drawn to scale.

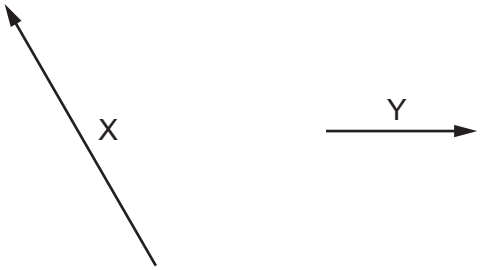

If X = Y – Z, which diagram represents the vector Z?

A

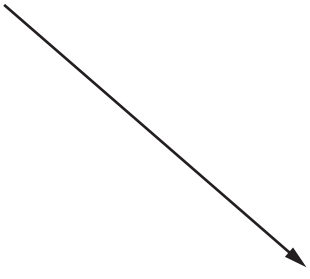

B

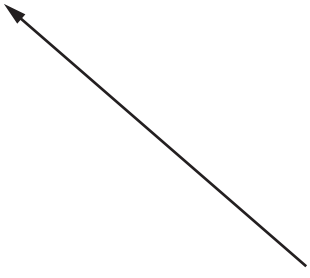

C

D

5 Which equation, representing uniformly accelerated motion in a straight line, can be determined using **only** the definition of acceleration?

A $s = ut + \frac{1}{2}at^2$

B $s = \frac{1}{2}(u + v)t$

C $v = u + at$

D $v^2 = u^2 + 2as$

6 An object moves from rest with uniform velocity horizontally and uniform acceleration vertically.

Which graph showing the variation with time of the displacement of the object from its initial position is correct?

A

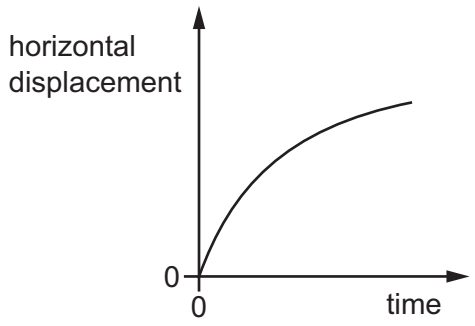

B

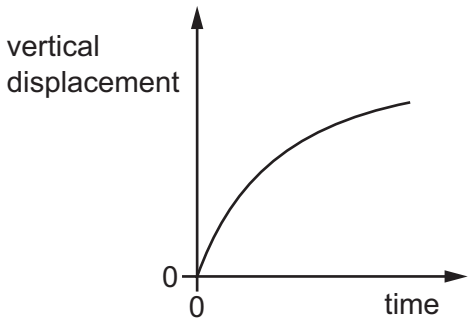

C

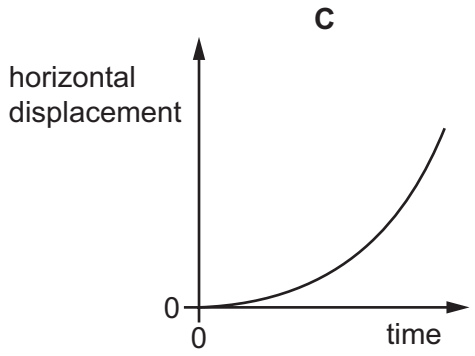

D

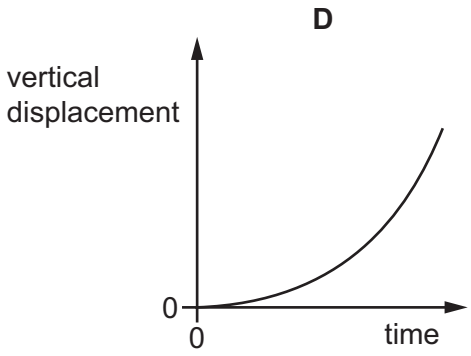

7 A device for spraying paint consists of a box with its faces horizontal and vertical. One of its vertical faces contains small holes. Paint is fed into the box under pressure via a vertical tube and exits through the holes as fine streams moving horizontally.

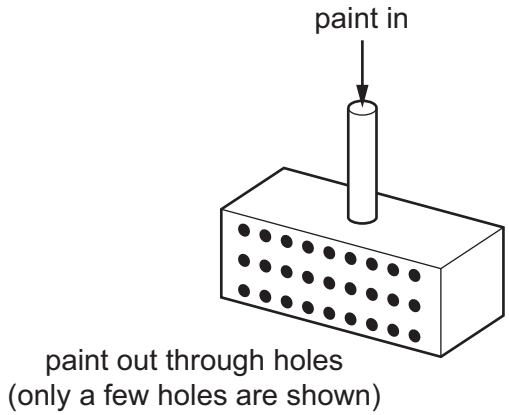

The paint is ejected at a speed of $2.5\,m\,s^{-1}$ through 400 holes, each of area $0.4\,mm^2$. The density of the paint is $900\,kg\,m^{-3}$.

What is the horizontal force required to hold the device stationary as it ejects the paint?

A 0.36 N **B** 0.90 N **C** 2.3 N **D** 900 N

8 Each diagram illustrates a pair of forces of equal magnitude.

Which diagram gives an example of a pair of forces that is described by Newton's third law of motion?

A

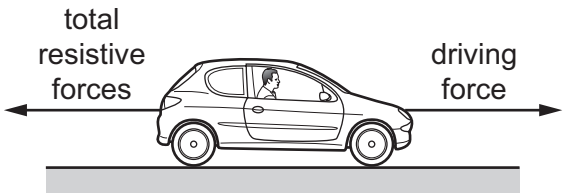

B

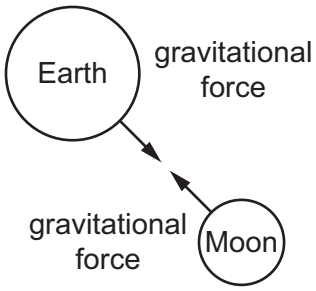

C

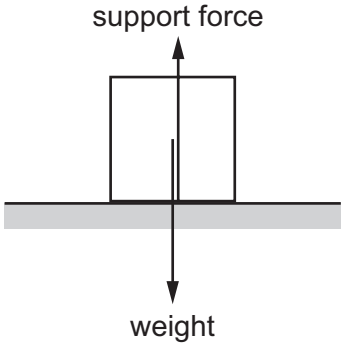

D

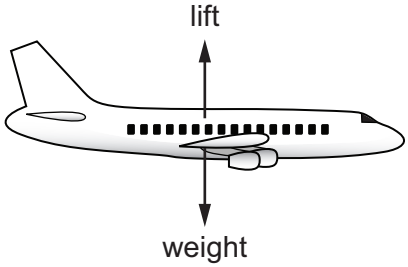

9 Two balls of identical shape and size but different masses are falling through the same liquid.

The sum of the drag force and upthrust acting on each ball is equal to its weight.

Which statement about the two balls is correct?

A The heavier ball has a larger acceleration than the lighter ball.

B The heavier ball has a smaller deceleration than the lighter ball.

C The heavier ball is falling at the same speed as the lighter ball.

D The heavier ball is falling at a larger speed than the lighter ball.

10 A perfectly elastic collision occurs between two objects X and Y. The mass of X is m and the mass of Y is $4m$. Object X travels at speed v before the collision and speed $\frac{3v}{5}$ in the opposite direction after the collision. Object Y is stationary before the collision.



What is the kinetic energy of Y after the collision?

A $\frac{8}{10}mv^2$ **B** $\frac{34}{50}mv^2$ **C** $\frac{16}{50}mv^2$ **D** $\frac{1}{5}mv^2$

11 What is **not** a requirement for two forces to act as a couple?

A The two forces act in opposite directions.

B The two forces act through the same point.

C The two forces combine to produce zero resultant force.

D The two forces have equal magnitude.

© UCLES 2023

12 A uniform metre rule is pivoted at the 34.0 cm mark, as shown.

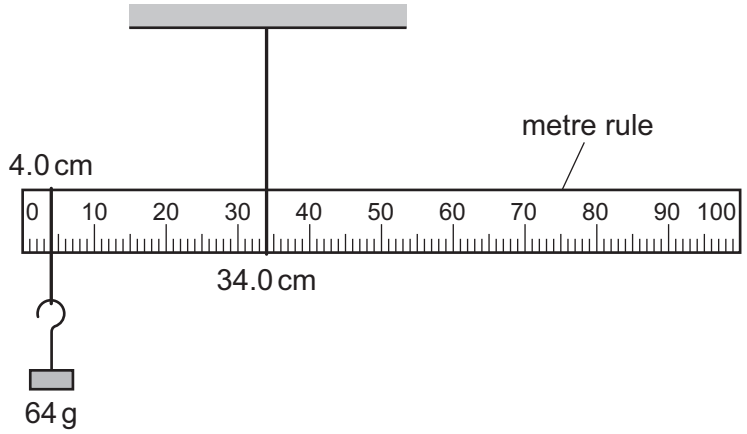

The rule balances when a 64 g mass is hung from the 4.0 cm mark.

What is the mass of the metre rule?

A 38 g **B** 44 g **C** 120 g **D** 136 g

13 A volume of 1.5 m^3 of water is mixed with 0.50 m^3 of alcohol. The density of water is 1000 $kg\,m^{-3}$ and the density of alcohol is 800 $kg\,m^{-3}$.

The volume of the mixture is 2.0 m^3.

What is the density of the mixture?

A 850 $kg\,m^{-3}$ **B** 900 $kg\,m^{-3}$ **C** 940 $kg\,m^{-3}$ **D** 950 $kg\,m^{-3}$

14 An object is falling at a constant speed through a viscous liquid. F_U is the upthrust on the object due to the liquid. W_L is the weight of the liquid displaced by the object. W_O is the weight of the object.

Which equation **must** be correct?

A $F_U = W_L$

B $F_U = W_O - W_L$

C $F_U = W_O$

D $F_U = W_O + W_L$

© UCLES 2023

15 An airport has a mechanical system for moving luggage. The system uses a horizontal conveyor belt, a sloping conveyor belt, a lift and a frictionless slide. A suitcase is moved around the airport using this system.

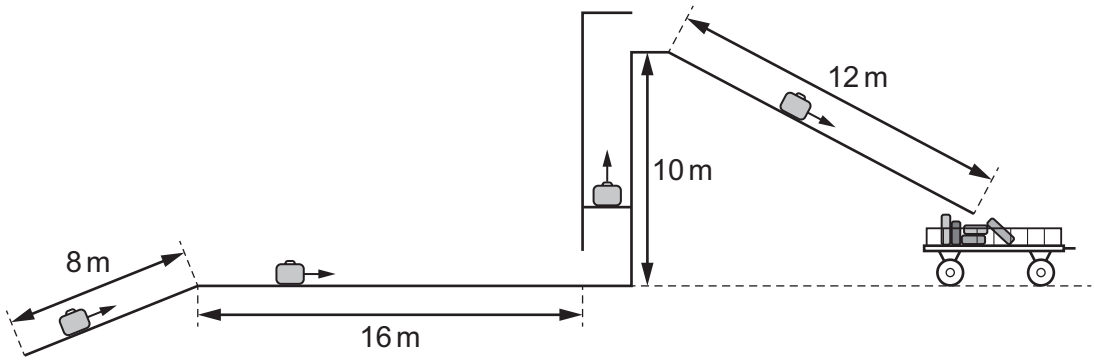

Resistive forces opposing the motion of the suitcase are negligible.

For which movement of the suitcase is the net work done on the suitcase greatest?

A moving the suitcase a distance of 8 m at a constant speed up the sloping conveyor belt

B moving the suitcase a distance of 16 m at a constant speed along the horizontal conveyor belt

C moving the suitcase a distance of 10 m at a constant speed vertically upwards on the lift

D moving the suitcase a distance of 12 m at increasing speed downwards on the slide

16 A car moves along a horizontal road with a constant velocity v against a resistive force F.

The engine of the car has an efficiency of 25%.

What is the input power to the engine?

A $\frac{Fv}{4.0}$ **B** $\frac{4.0}{Fv}$ **C** $4.0Fv$ **D** $\frac{4.0F}{v}$

17 An object of mass 0.40 kg is projected into the air and follows a curved path above horizontal ground.

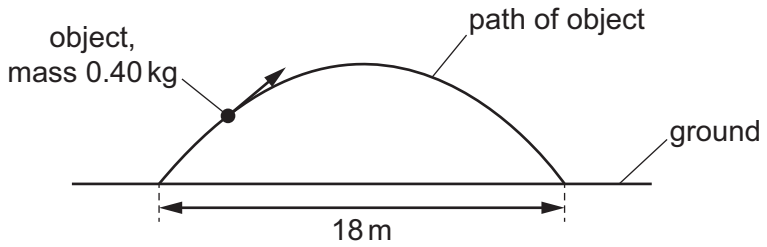

The object takes a time of 1.5 s to move along its path. The object lands a horizontal distance of 18 m from its initial position. Air resistance is negligible.

What is the kinetic energy of the object at its maximum height?

A 0 J **B** 2.4 J **C** 11 J **D** 29 J

© UCLES 2023

18 A metal wire has length 5.2 m and diameter 1.0 mm. The metal has Young modulus 360 GPa.

The wire is fixed at one end and a force is applied to the other end. The force extends the wire by 7.2 mm. The wire obeys Hooke's law.

What is the force applied to the wire?

A 1.2×10^2 N

B 3.9×10^2 N

C 5.0×10^2 N

D 1.6×10^3 N

19 The graph shows how the length of a spring varies with the force applied to it.

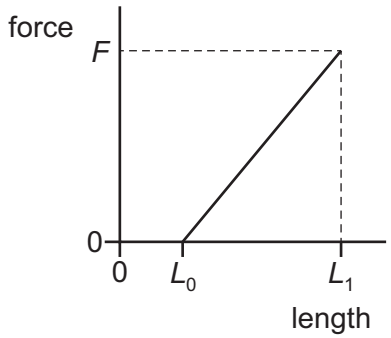

The spring has unstretched length L_0. When a force F is applied, the spring has length L_1.

What is the work done in stretching the spring to length L_1?

A $\frac{1}{2}FL_1$ **B** $\frac{1}{2}F(L_1 - L_0)$ **C** FL_1 **D** $F(L_1 - L_0)$

20 A progressive wave of frequency 1.5 kHz travels in a medium at a speed of 340 m s^{-1}.

What is the minimum distance between two points on the wave that have a phase difference of 70°?

A 4.4 cm **B** 8.8 cm **C** 18 cm **D** 23 cm

© UCLES 2023

21 Graph 1 shows the variation with time of displacement at a fixed distance along a progressive wave.

Graph 2 represents the same wave and shows the variation with distance of displacement at an instant in time.

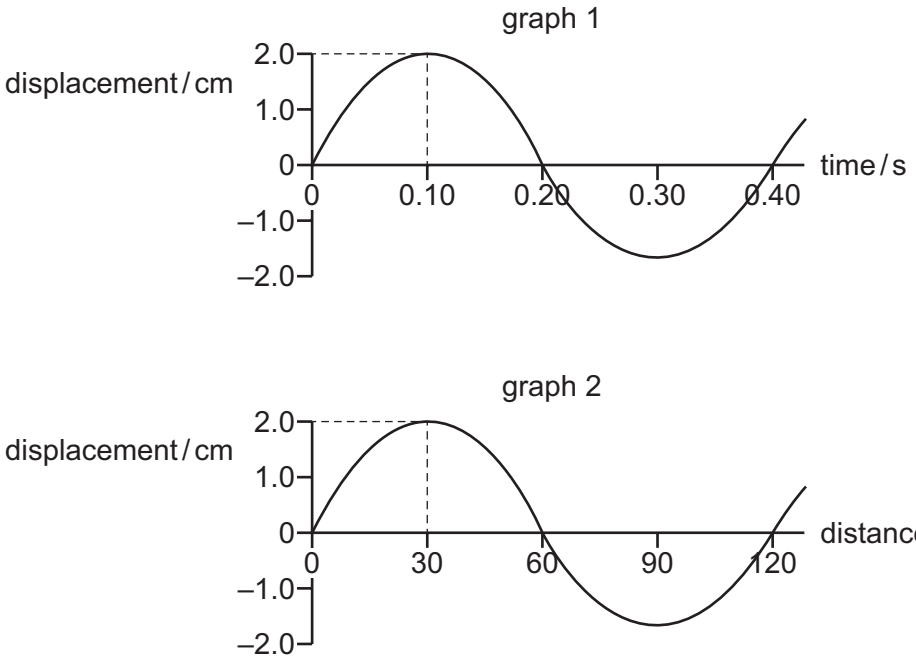

What is the speed of the wave?

A $5.0\,cm\,s^{-1}$ **B** $48\,cm\,s^{-1}$ **C** $150\,cm\,s^{-1}$ **D** $300\,cm\,s^{-1}$

22 A vehicle moves with constant velocity along a road directly towards an observer. The observed frequency of the sound from the vehicle changes as the vehicle moves past the observer.

Which phenomenon explains the change in frequency?

A diffraction

B interference

C polarisation

D the Doppler effect

23 An electromagnetic wave has a wavelength of 2.1 cm in a vacuum.

Which region of the electromagnetic spectrum contains this wave?

A infrared

B microwave

C radio wave

D visible light

© UCLES 2023

24 A source of plane polarised light is observed through two polarising filters.

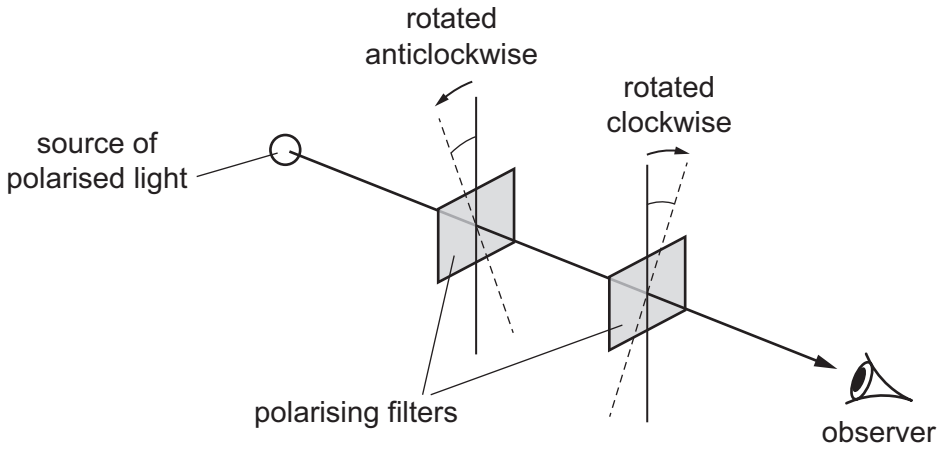

The filters are positioned so that the source appears at its brightest. One of the filters is then rotated clockwise and the other filter is rotated anticlockwise through the same angle.

How does the source appear when both filters have been rotated 90° and 180° from their initial positions?

	90°	180°
A	brightest	brightest
B	brightest	darkest
C	darkest	brightest
D	darkest	darkest

© UCLES 2023

25 The diagram shows a string stretched between fixed points X and Y. There is a stationary wave on the string.

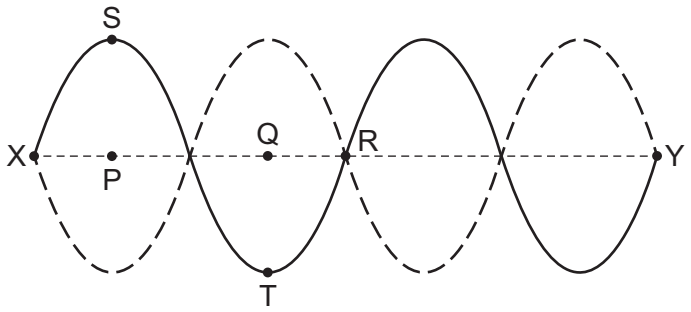

The solid curve shows the string at a position of maximum displacement at time t_0. The dashed curve shows the other position of maximum displacement. The straight central dashed line shows the mean position of the string.

Point S on the string is directly above point P. Point T on the string is directly below point Q.

Which statement is correct?

A A short time after t_0, point R on the string will be displaced.

B A short time after t_0, points S and T on the string move in opposite directions.

C The distance between P and Q is one wavelength.

D Two moving points on the string that are equal distances from point R vibrate in phase.

26 The variation with distance x of the intensity I along a stationary sound wave in air is shown.

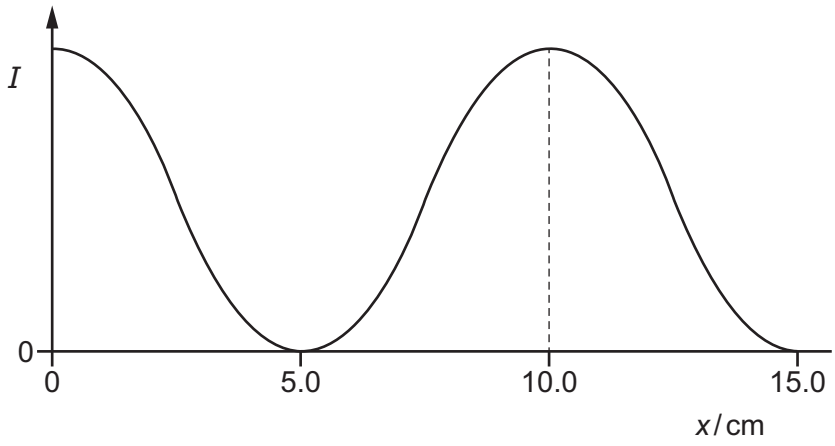

The speed of sound in air is $340\,\text{m}\,\text{s}^{-1}$.

What is the frequency of the sound wave?

A 1700 Hz **B** 2300 Hz **C** 3400 Hz **D** 6800 Hz

© UCLES 2023

27 An experiment is set up to demonstrate the diffraction of water waves in a ripple tank.

The waves pass through a gap of width w and some diffraction of the waves is observed.

The wavelength of the waves is now doubled.

What is the new gap width needed to cause the same amount of diffraction as before?

A $0.5w$ **B** w **C** $2w$ **D** $4w$

28 Two coherent electromagnetic waves are travelling in a vacuum. The two waves meet at a point. At this point, the two waves have different intensities.

Which statement about the waves is **not** correct?

A They have a constant phase difference at the point.

B They have the same amplitude at the point.

C They have the same frequency.

D They travel at the same speed.

29 A parallel beam of light of wavelength 600 nm is incident normally on a diffraction grating.

The distance between adjacent slits in the grating is 2.0×10^{-6} m. A screen is placed parallel to the grating, at a distance of 1.50 m from the grating. **Third**-order diffraction maxima are observed at the two ends of the screen, as shown.

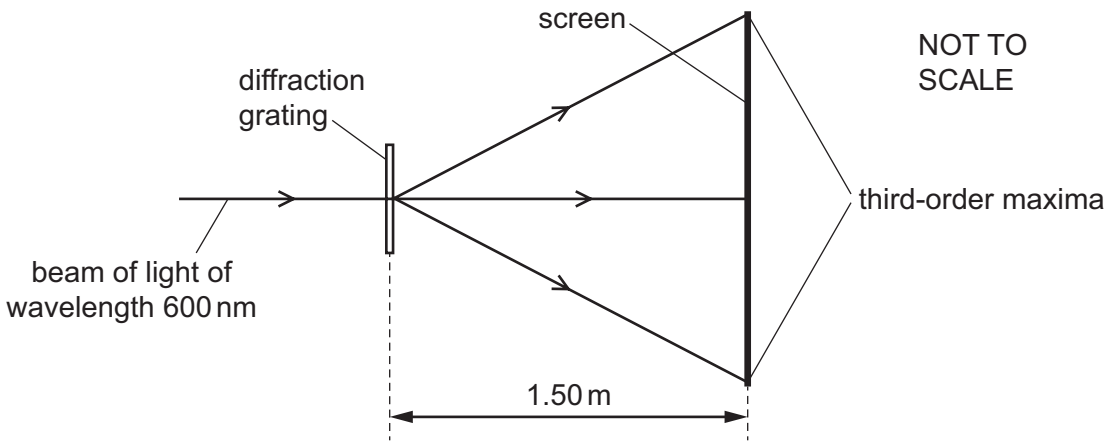

What is the distance between the two ends of the screen?

A 1.4 m **B** 2.7 m **C** 3.1 m **D** 6.2 m

30 A metal wire is connected between the terminals of a cell so that there is a current in the wire.

Which statement is correct?

A Negatively charged electrons in the wire move from the negative terminal to the positive terminal.

B Negatively charged nuclei in the wire move from the negative terminal to the positive terminal.

C Positively charged electrons in the wire move from the positive terminal to the negative terminal.

D Positively charged nuclei in the wire move from the positive terminal to the negative terminal.

31 Two resistors of resistances R and $2R$ are connected in parallel with a battery of electromotive force (e.m.f.) 12 V and negligible internal resistance.

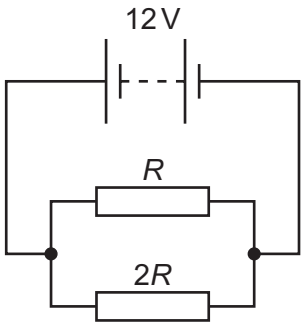

The total power dissipated by the two resistors is 36 W.

What is the value of R?

A 0.50 Ω **B** 2.7 Ω **C** 4.0 Ω **D** 6.0 Ω

32 A wire has a length of 3.0 m and is made of metal of resistivity $4.9 \times 10^{-7}\,\Omega\,\text{m}$.

A potential difference (p.d.) of 12 V is applied across the wire so that it has a current of 1.4 A.

What is the cross-sectional area of the wire?

A $1.2 \times 10^{-7}\,\text{m}^2$

B $1.7 \times 10^{-7}\,\text{m}^2$

C $1.1 \times 10^{-6}\,\text{m}^2$

D $1.3 \times 10^{-5}\,\text{m}^2$

© UCLES 2023

33 A cell of negligible internal resistance is connected in series with a thermistor, a fixed resistor and an ammeter.

The thermistor is placed in a beaker of water and the temperature of the water is slowly increased.

A graph of current I against the temperature T of the thermistor is plotted.

Which graph could show the variation of I with T?

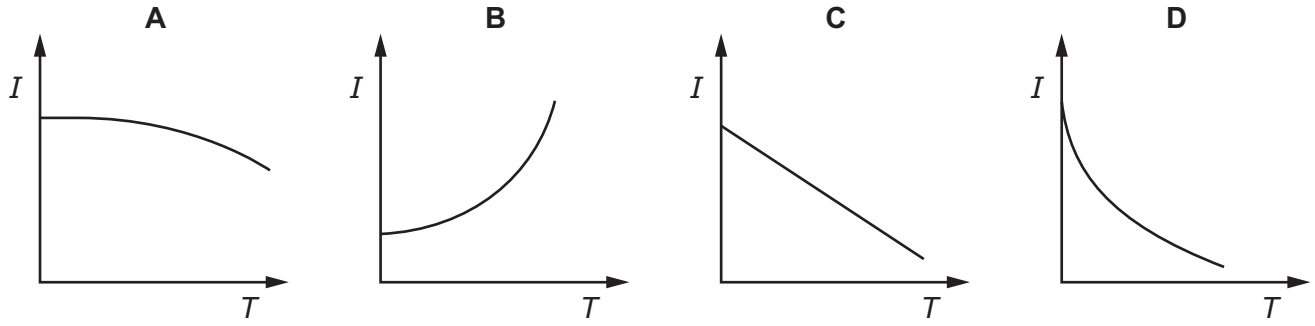

34 A battery with internal resistance is connected to a parallel arrangement of two resistors and a switch S, as shown.

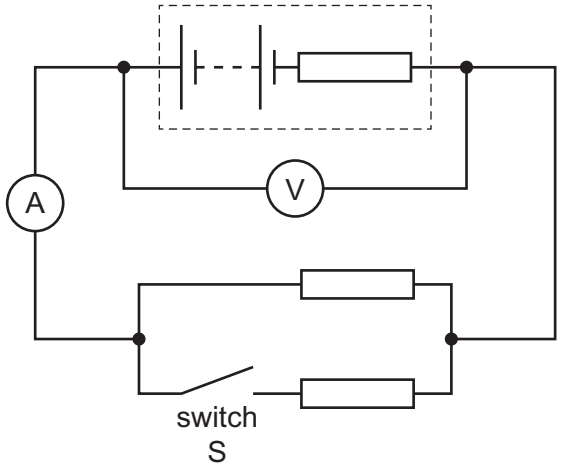

Initially, switch S is open.

What happens to the voltmeter and ammeter readings when switch S is closed?

	voltmeter reading	ammeter reading
A	decreases	increases
B	decreases	decreases
C	increases	increases
D	increases	decreases

35 Kirchhoff's first law states that the sum of the currents entering a junction in a circuit is equal to the sum of the currents leaving it.

The law is based on the conservation of a physical quantity.

What is this physical quantity?

A charge

B energy

C mass

D momentum

36 Two resistors have a combined resistance of 34 Ω when connected in series. The same resistors have a combined resistance of 7.4 Ω when connected in parallel.

What is the resistance of one of the resistors?

A 15 Ω **B** 17 Ω **C** 23 Ω **D** 27 Ω

37 A potentiometer circuit is used to investigate the electromotive force (e.m.f.) of a cell X.

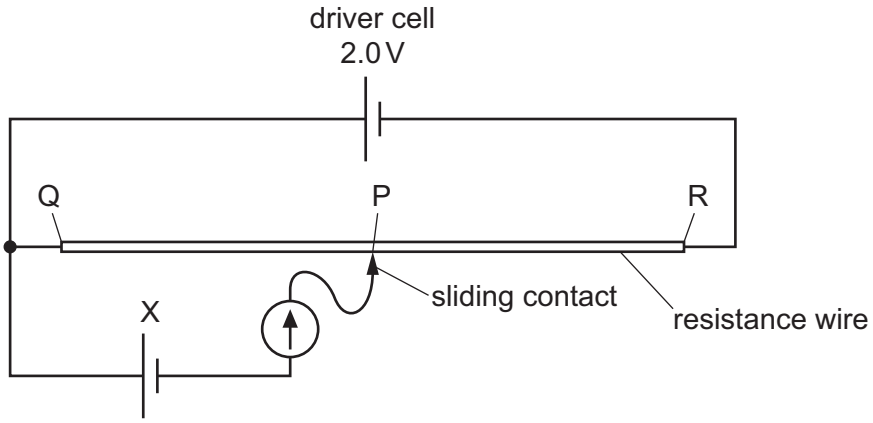

The e.m.f. of cell X is known to be approximately 0.50 V.

The driver cell has negligible internal resistance and an e.m.f. of 2.0 V. The sliding contact is moved along the uniform resistance wire between ends Q and R to a point P where the reading on the galvanometer is zero.

What is an expression for the approximate length QP?

A $\frac{QR}{4}$ **B** $\frac{QR}{3}$ **C** $\frac{2QR}{3}$ **D** $\frac{3QR}{4}$

© UCLES 2023

38 The table contains data for four different nuclei P, Q, R and S.

nucleus	number of neutrons	nucleon number
P	5	10
Q	6	10
R	6	14
S	8	16

Which two nuclei are isotopes of the same element?

A P and Q **B** P and S **C** Q and R **D** R and S

39 Which statement about β^- decay is correct?

A A neutron changes to a proton in the nucleus and an electron and an antineutrino are emitted.

B A neutron changes to a proton in the nucleus and an electron and a neutrino are emitted.

C A proton changes to a neutron in the nucleus and an electron and an antineutrino are emitted.

D A proton changes to a neutron in the nucleus and an electron and a neutrino are emitted.

40 What is the quark composition of a hydrogen-3 nucleus, ${}^{3}_{1}\mathrm{H}$?

	number of quarks	
	up	down
A	4	5
B	5	4
C	5	7
D	7	5

© UCLES 2023

BLANK PAGE

BLANK PAGE

BLANK PAGE

Permission to reproduce items where third-party owned material protected by copyright is included has been sought and cleared where possible. Every reasonable effort has been made by the publisher (UCLES) to trace copyright holders, but if any items requiring clearance have unwittingly been included, the publisher will be pleased to make amends at the earliest possible opportunity.

To avoid the issue of disclosure of answer-related information to candidates, all copyright acknowledgements are reproduced online in the Cambridge Assessment International Education Copyright Acknowledgements Booklet. This is produced for each series of examinations and is freely available to download at www.cambridgeinternational.org after the live examination series.

Cambridge Assessment International Education is part of Cambridge Assessment. Cambridge Assessment is the brand name of the University of Cambridge Local Examinations Syndicate (UCLES), which is a department of the University of Cambridge.

© UCLES 2023